76101 OUTRIDER DROPSHIP

1

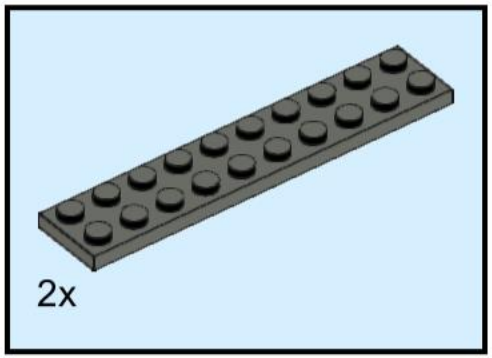

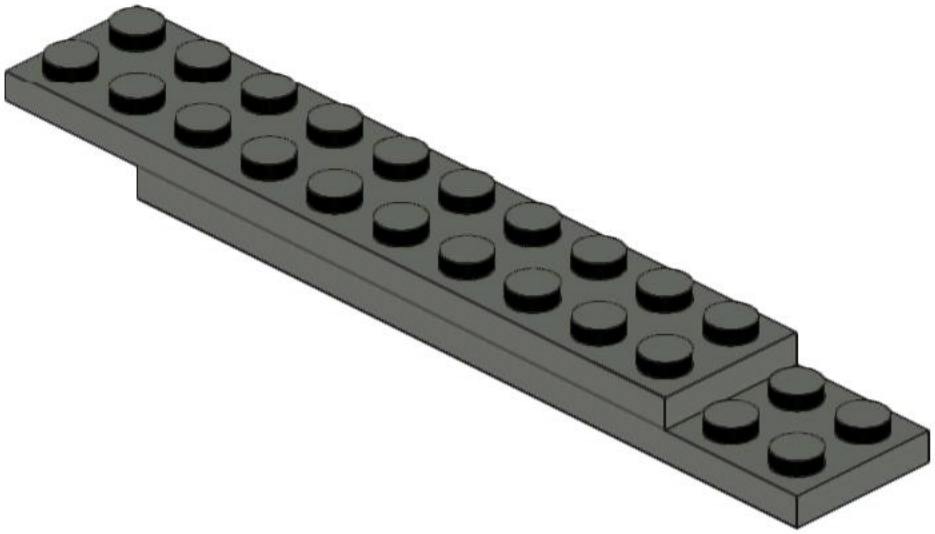

2

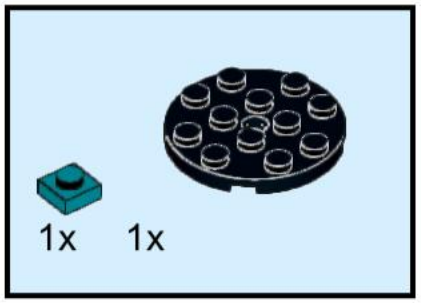

from the spare parts,
you don´t need this

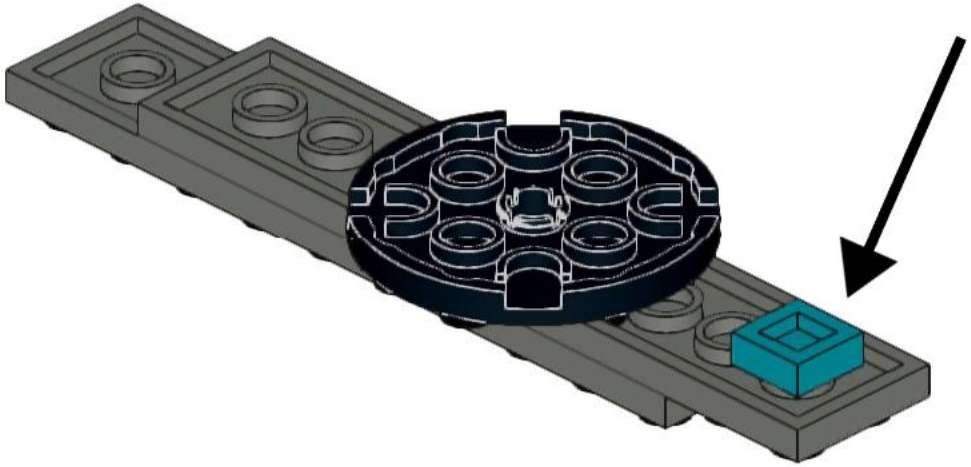

3

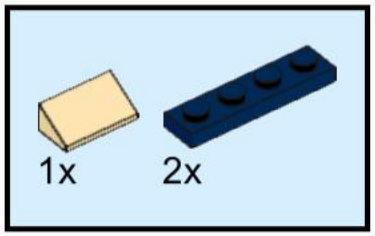

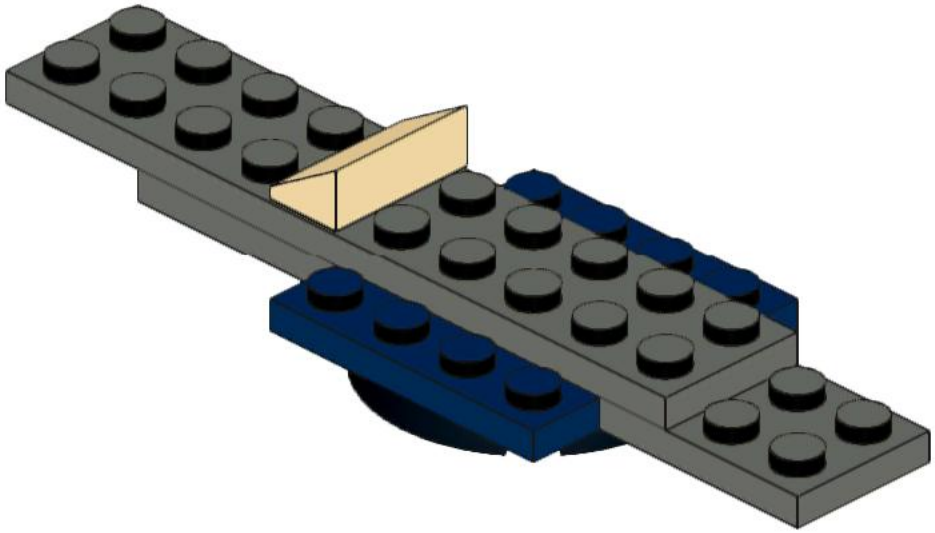

4

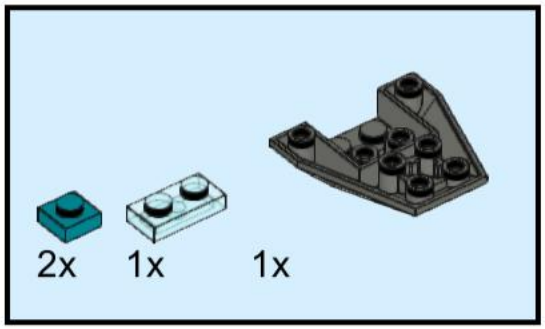

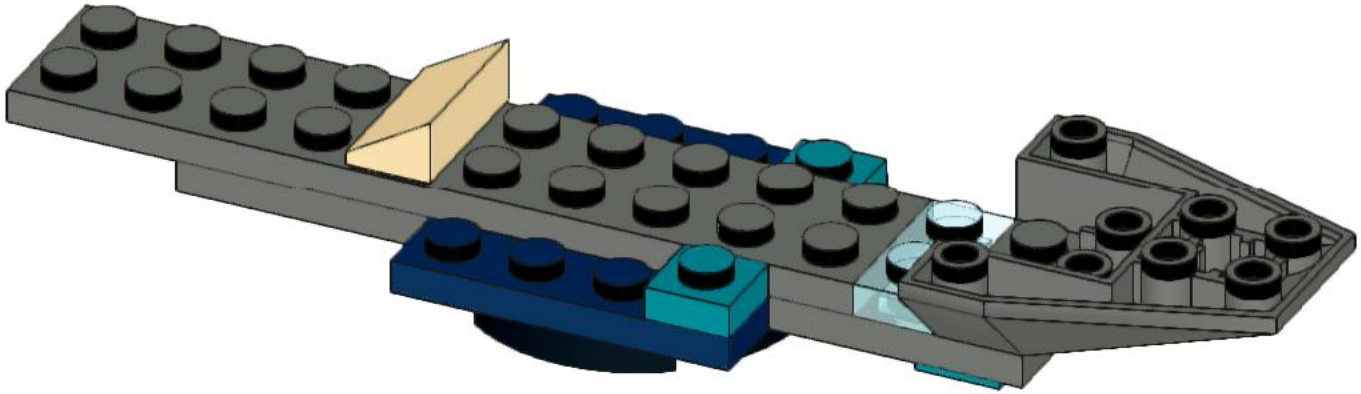

5

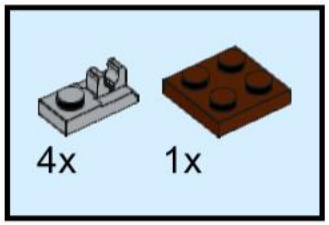

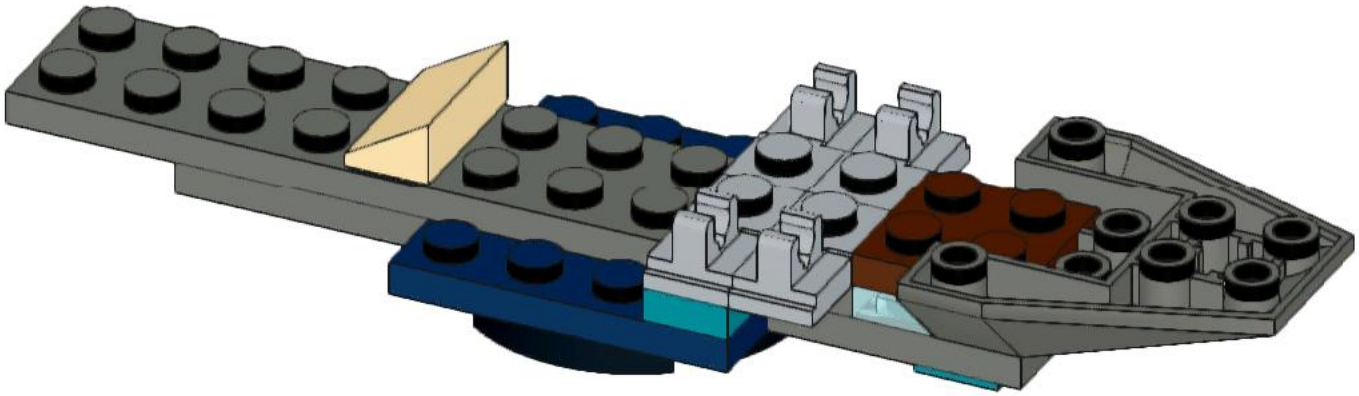

6

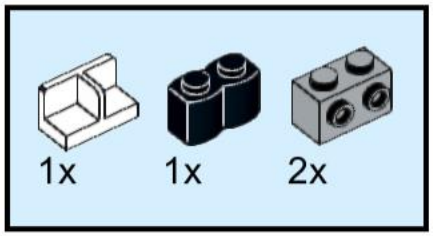

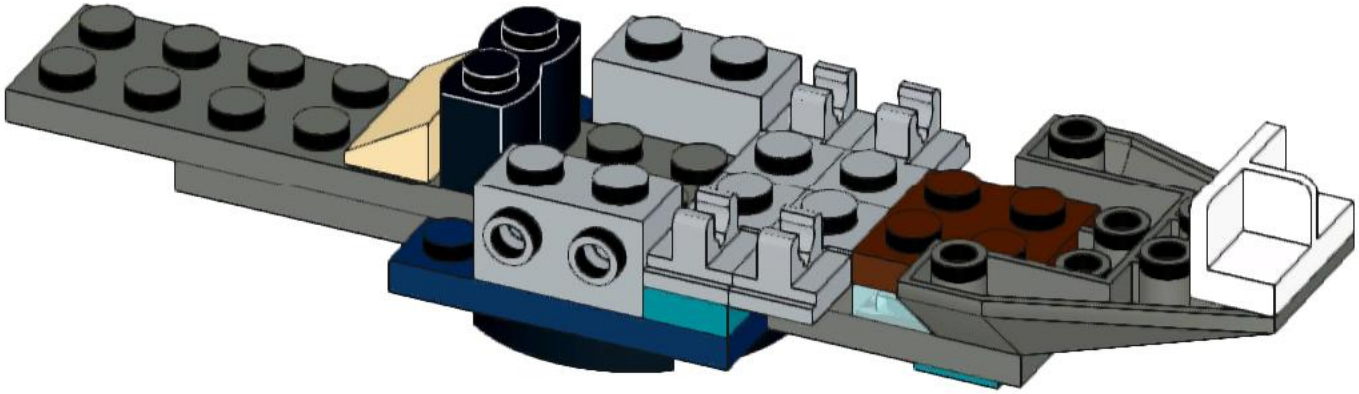

7

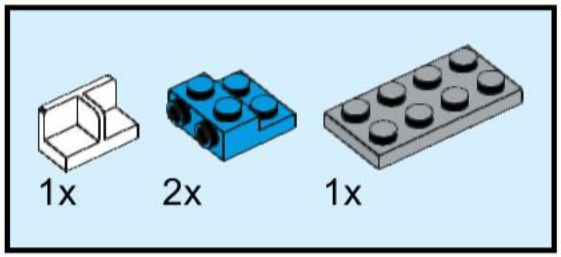

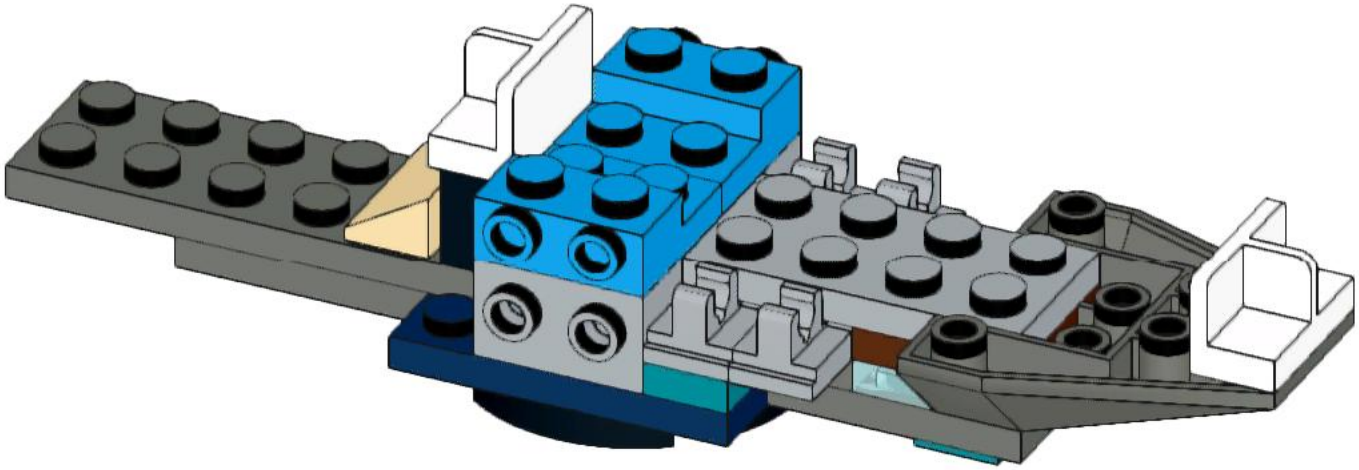

8

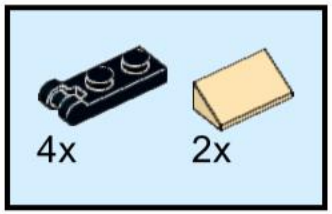

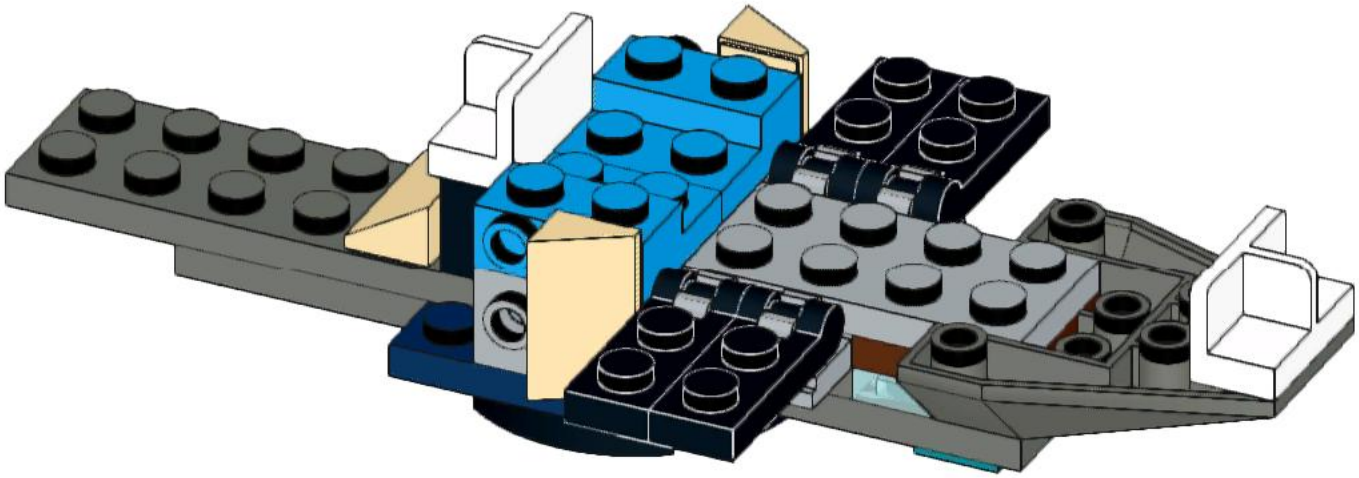

9

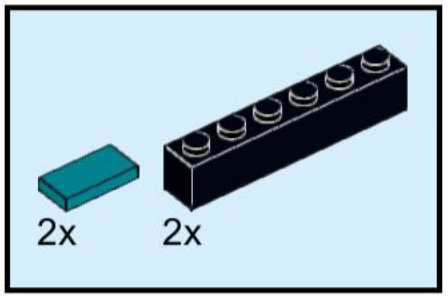

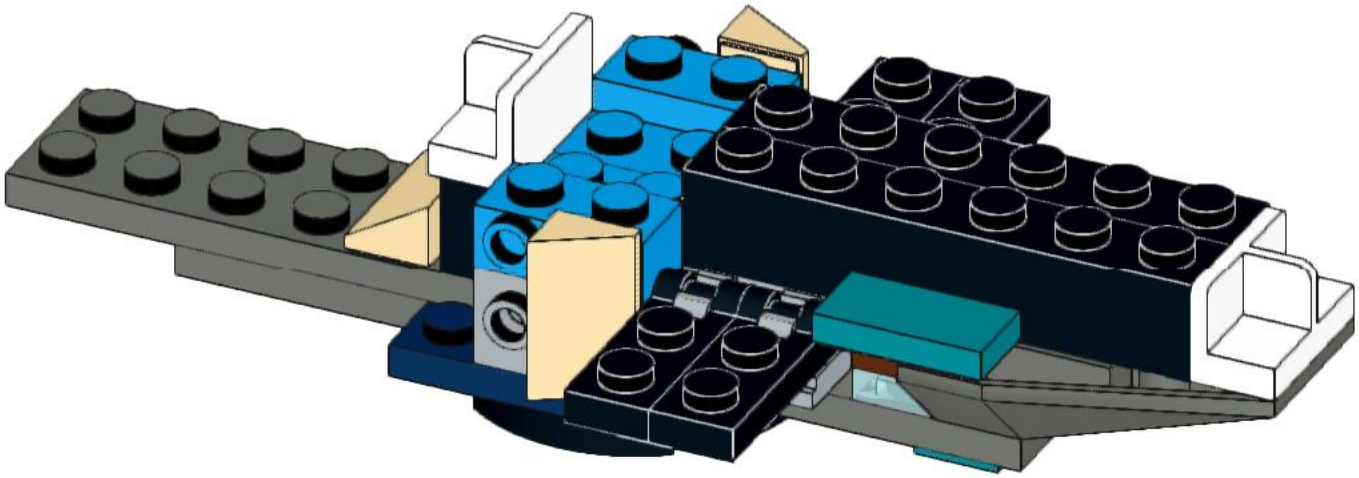

10

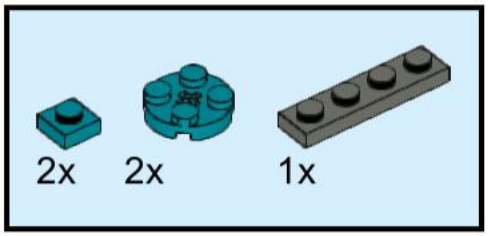

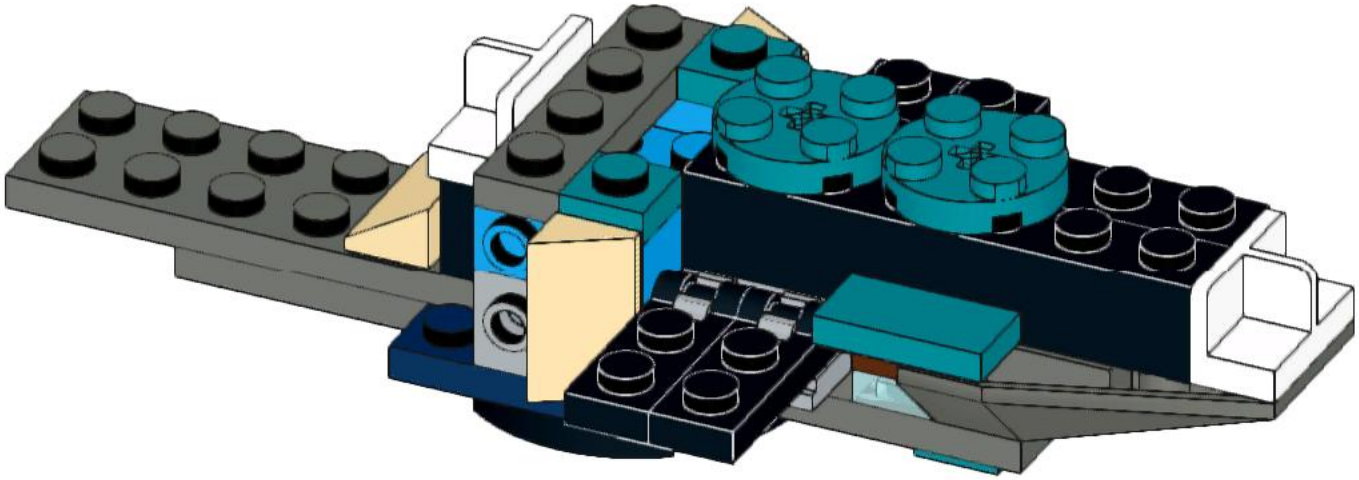

11

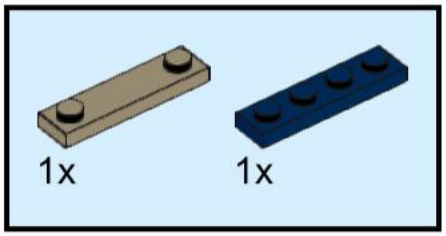

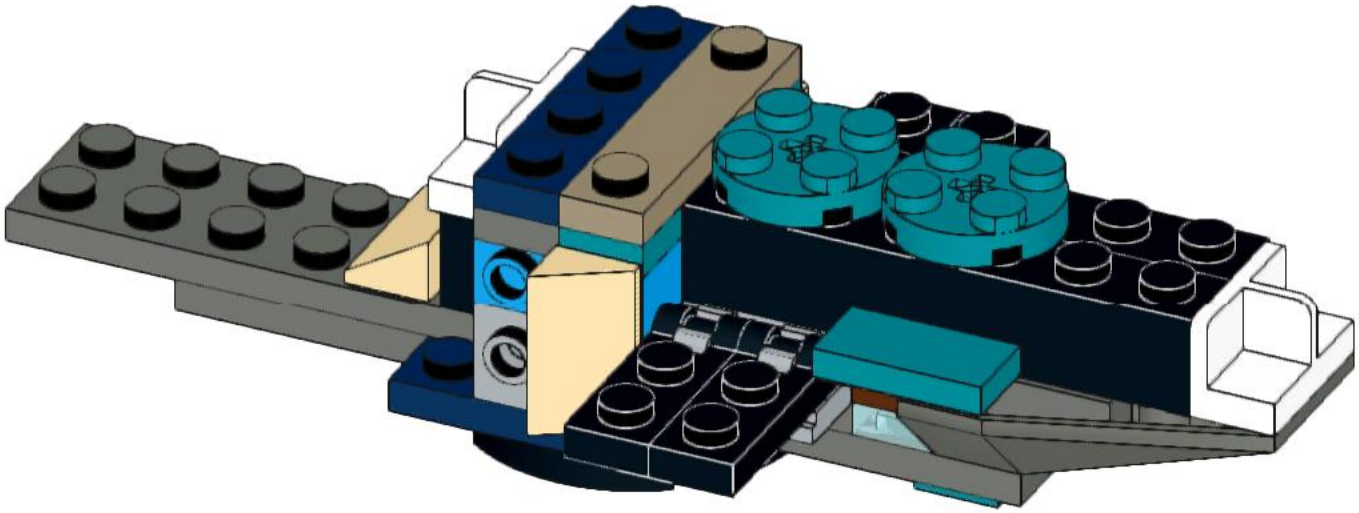

12

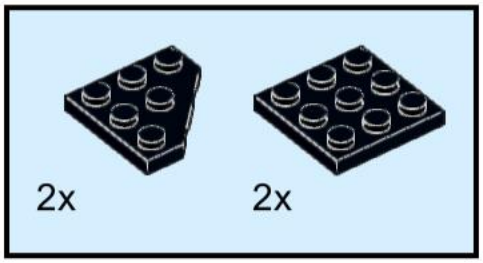

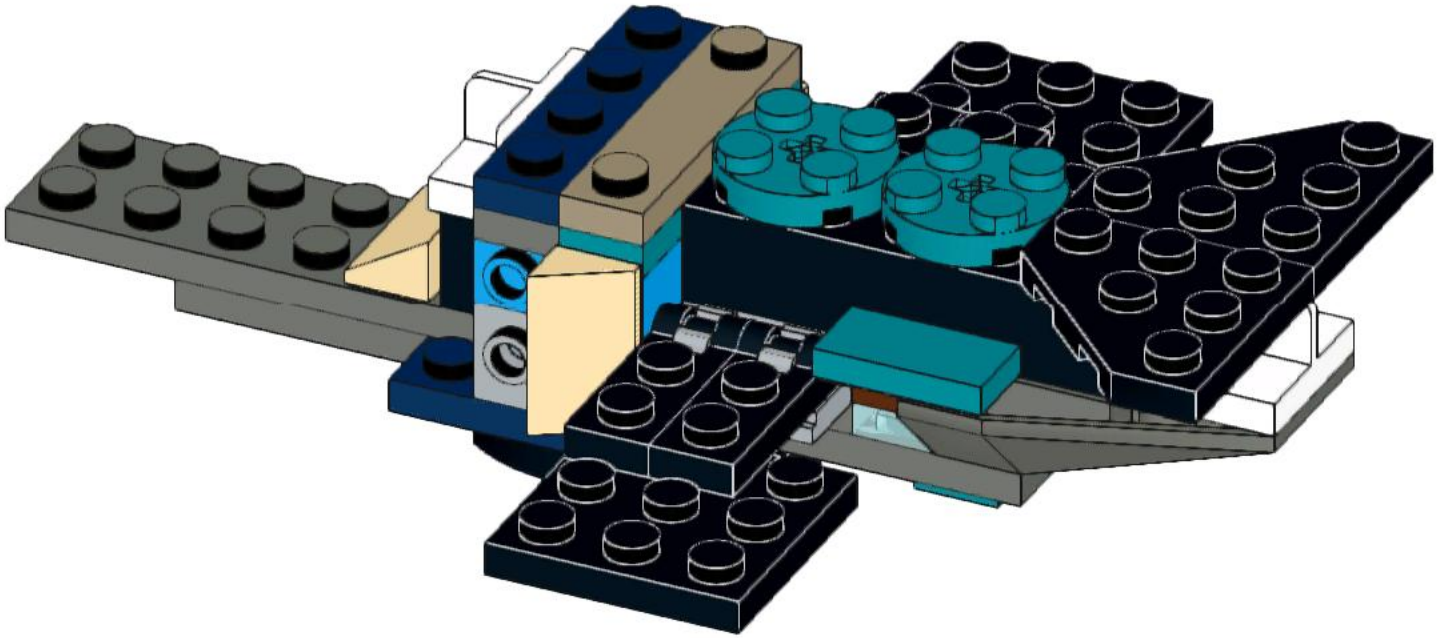

13

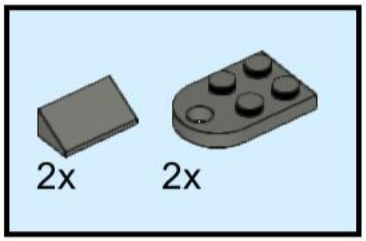

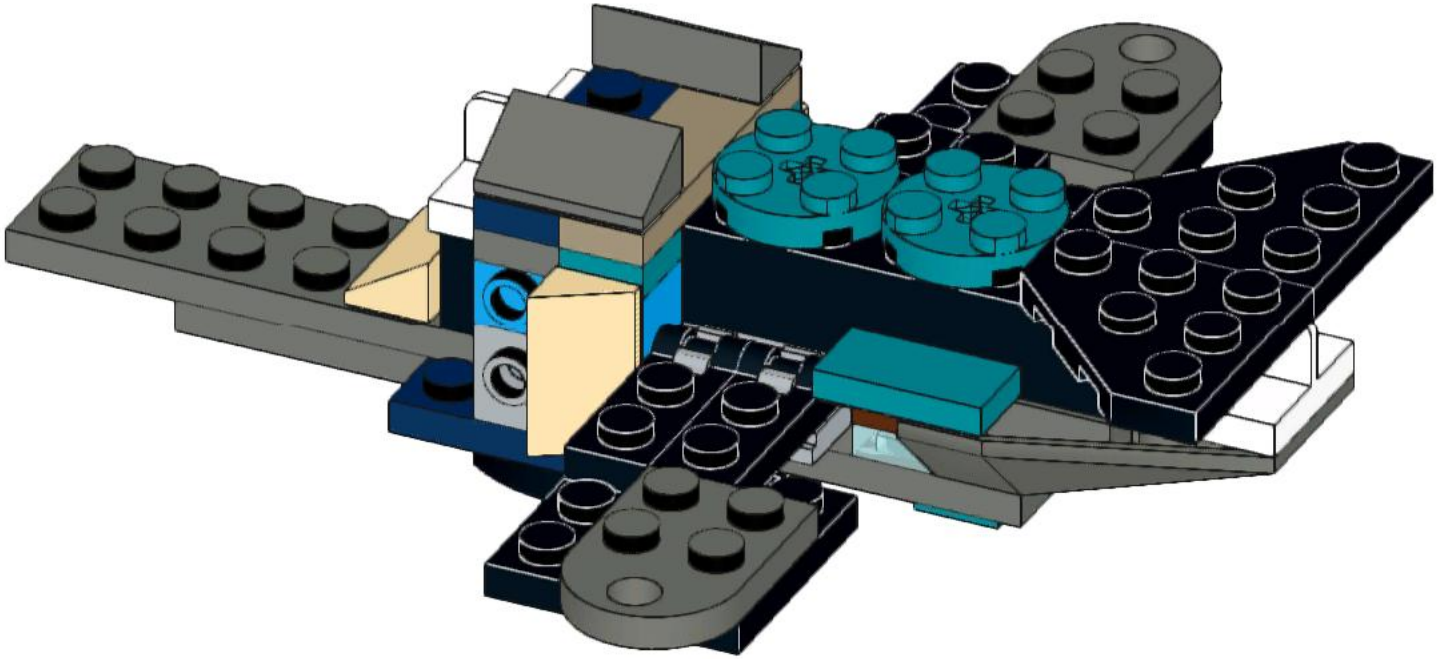

14

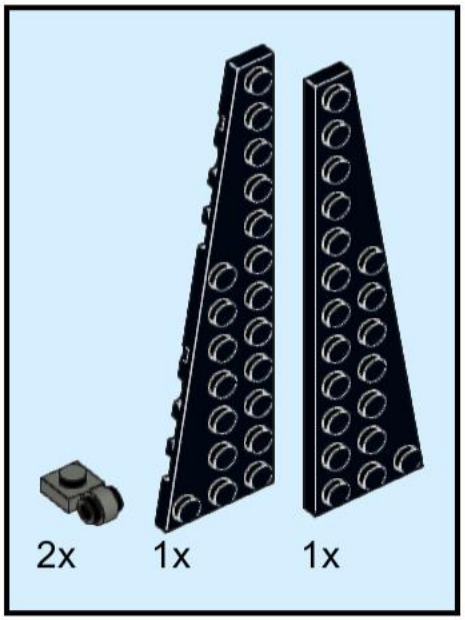

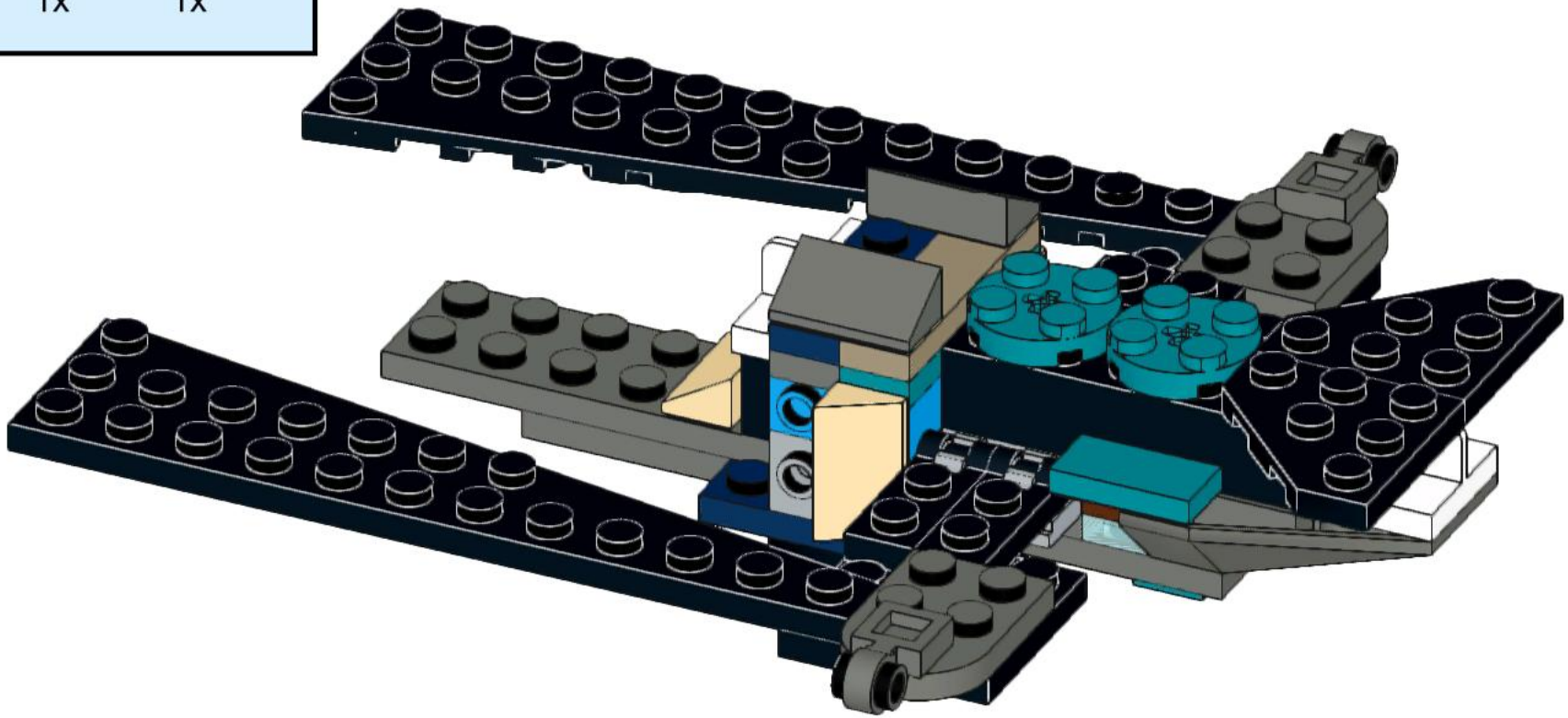

15

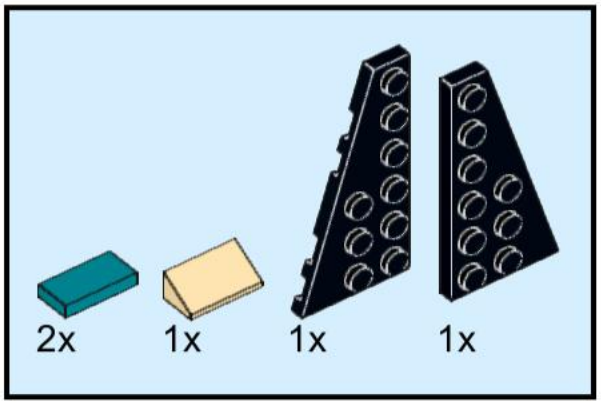

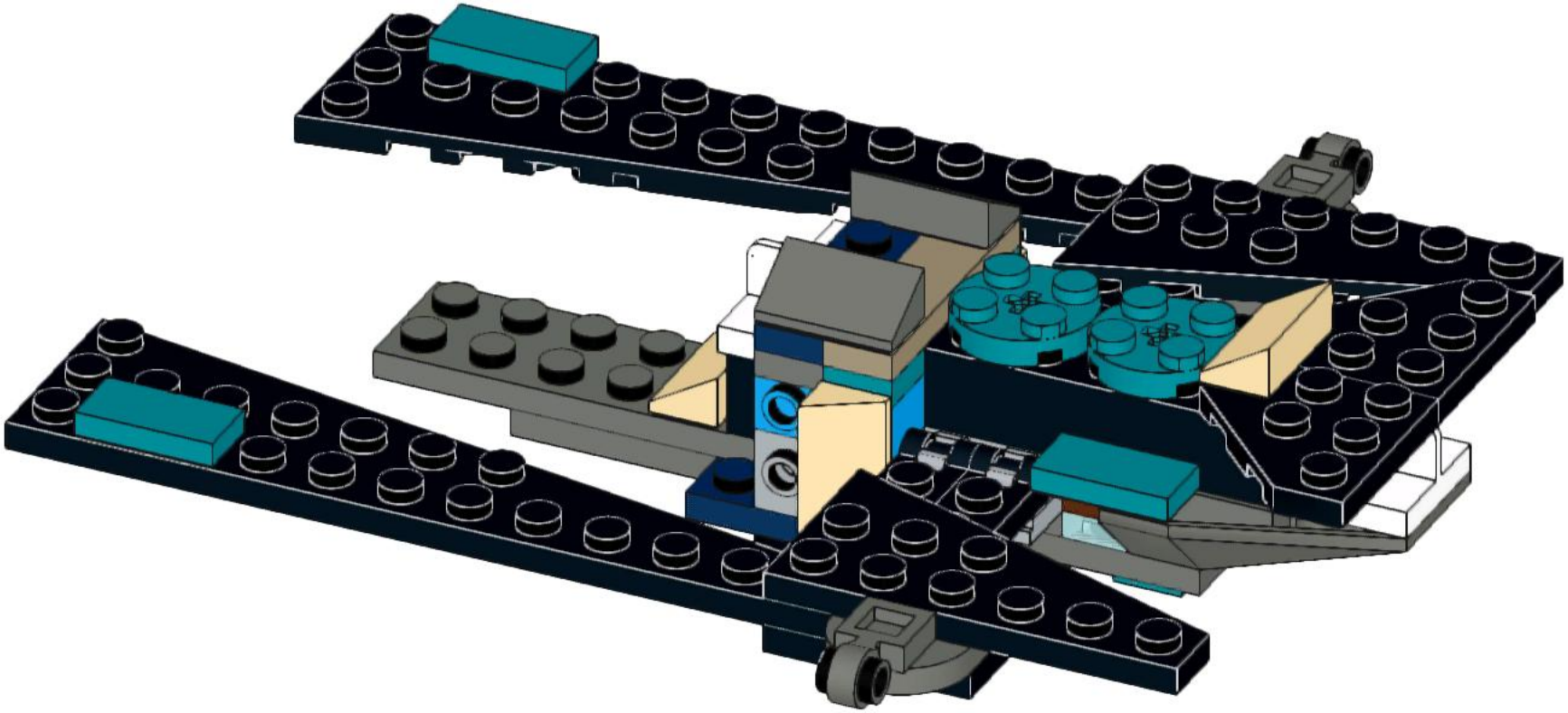

16

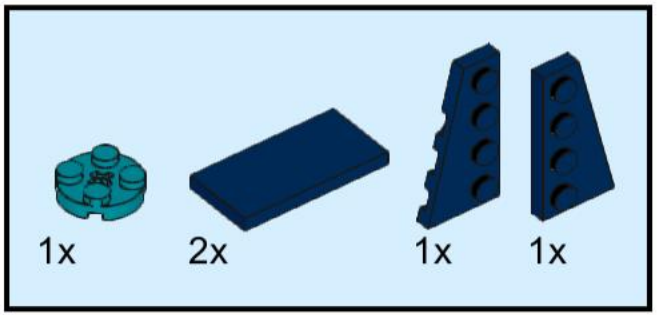

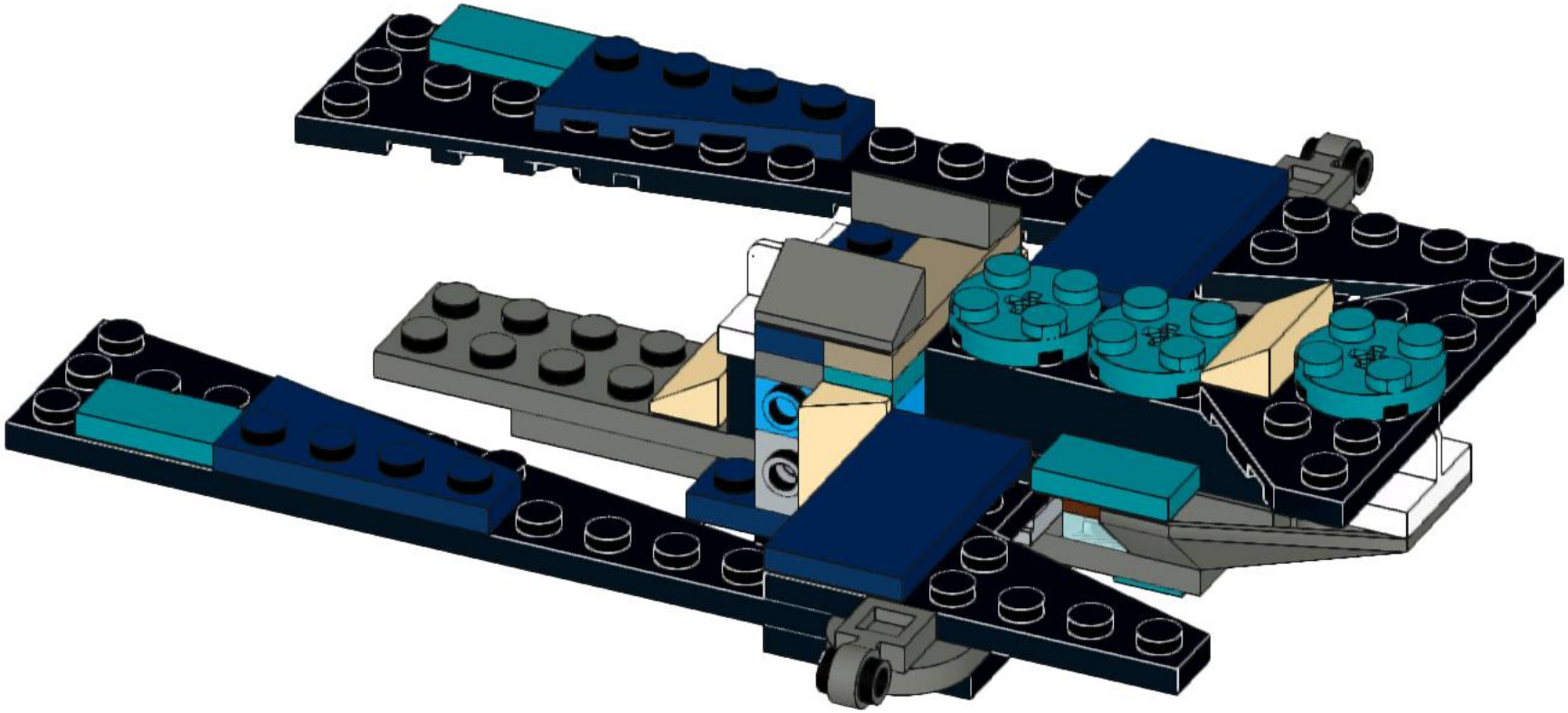

17

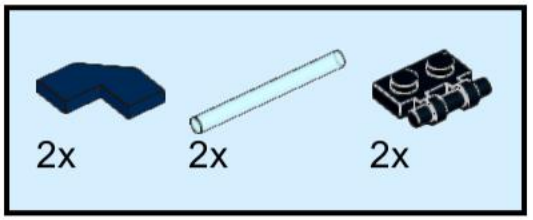

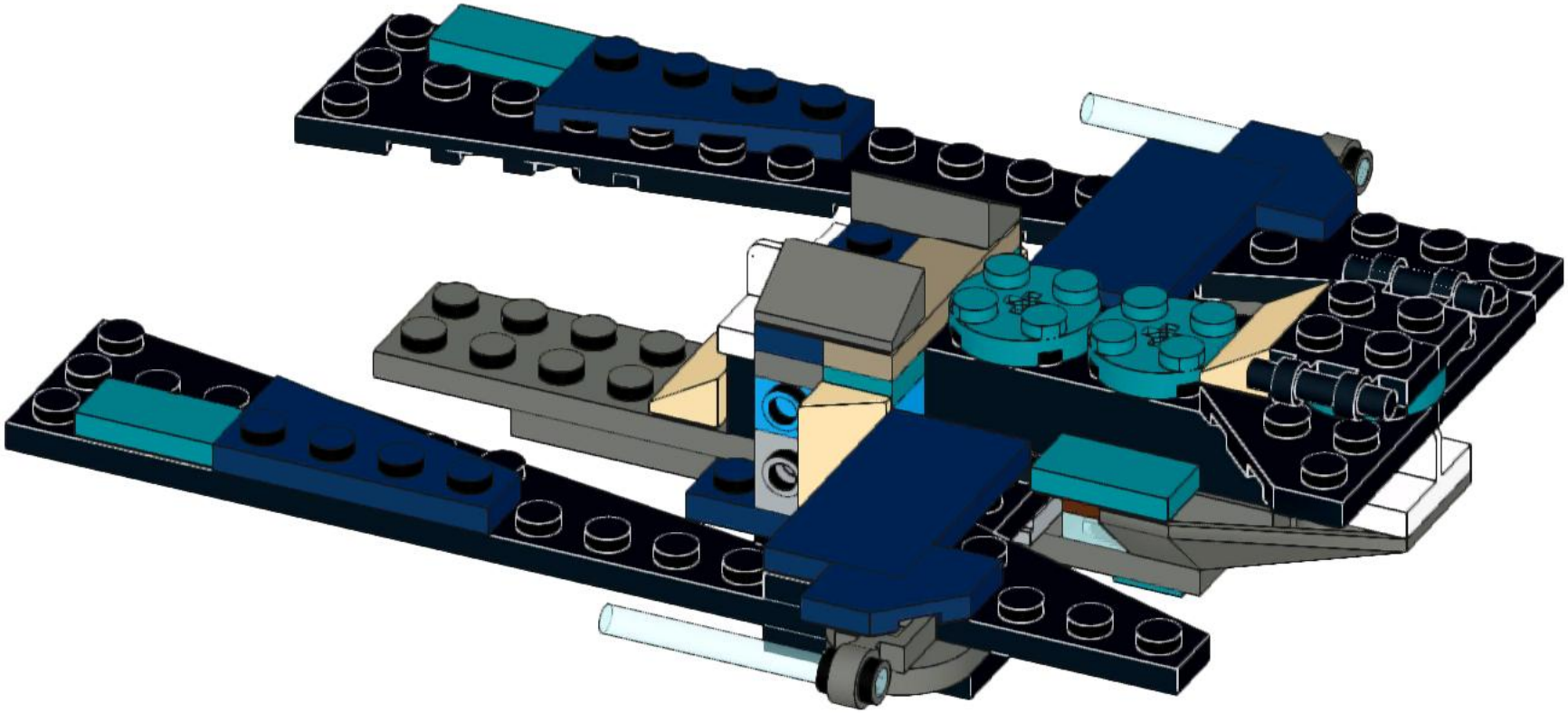

18

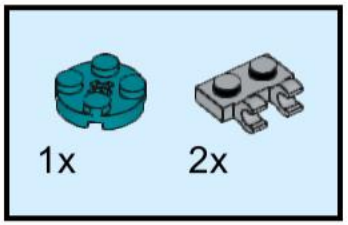

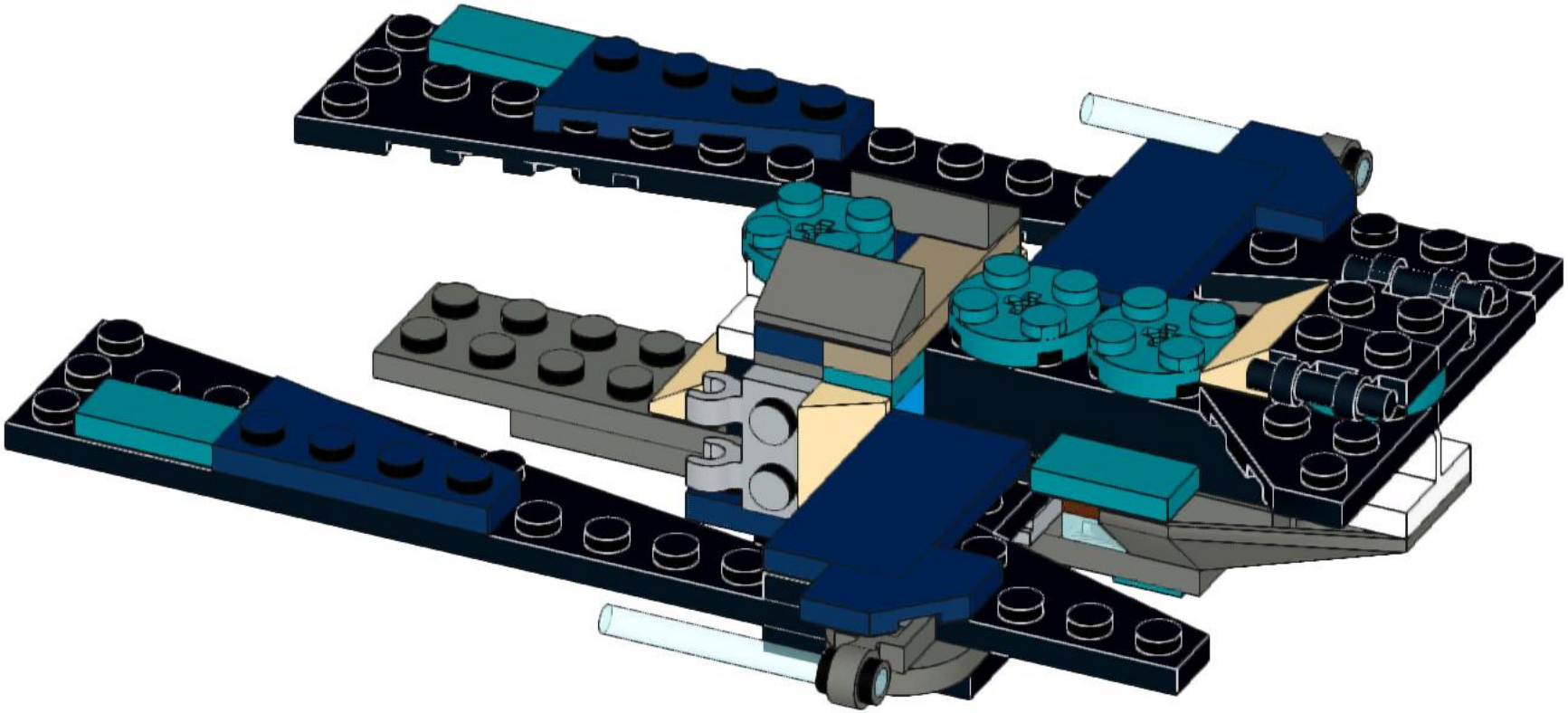

19

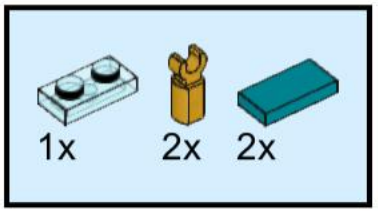

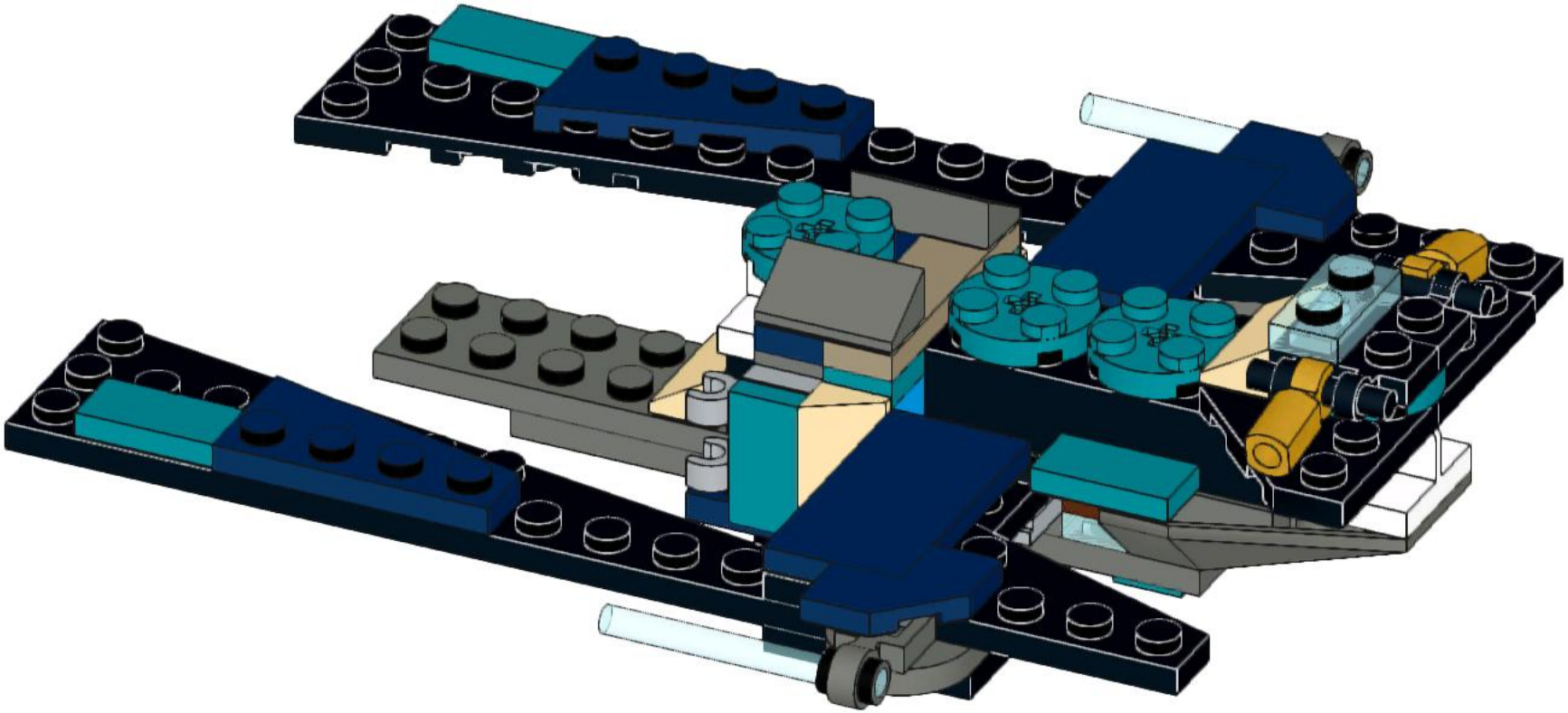

20

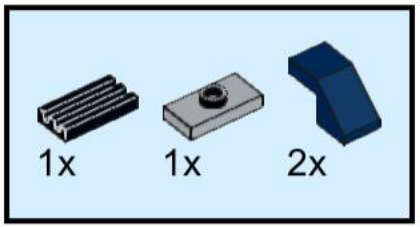

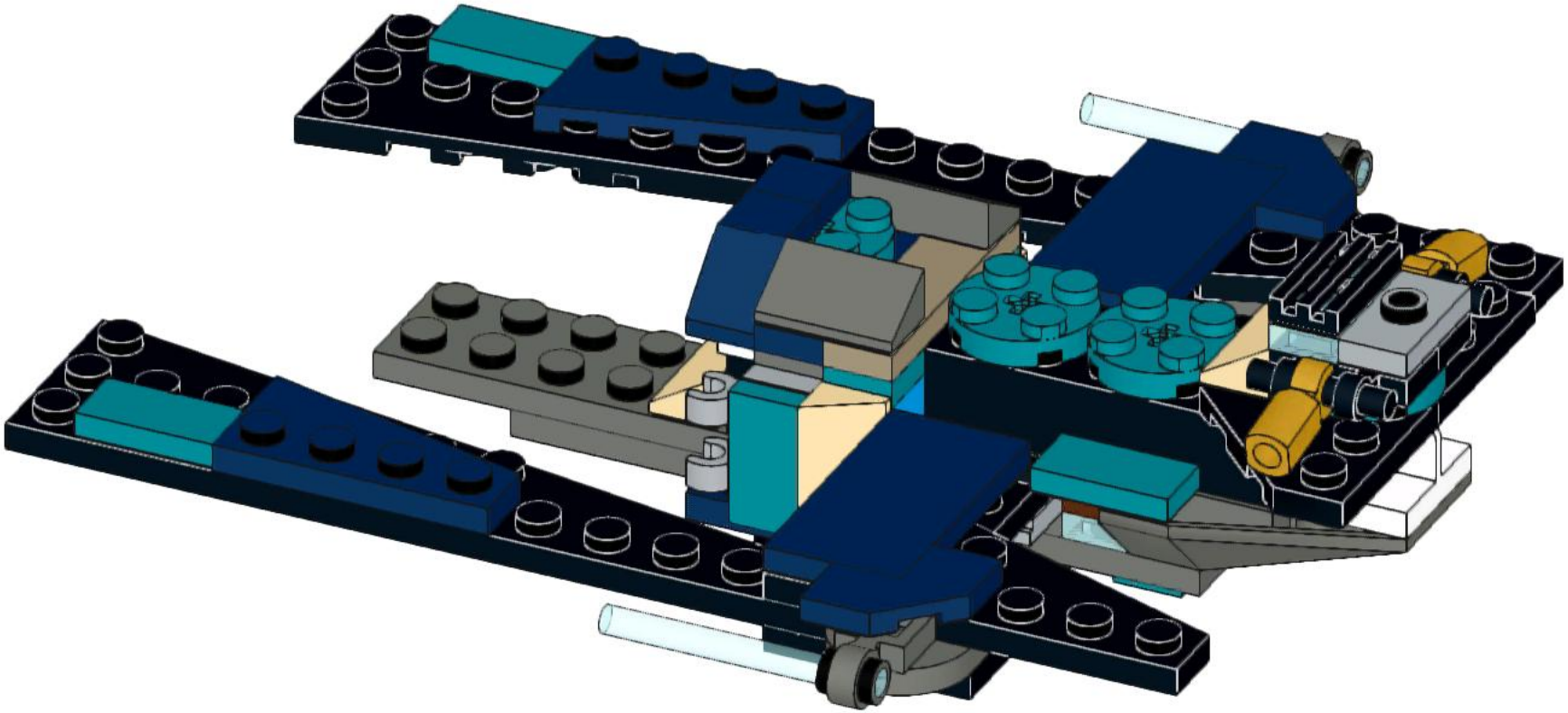

21

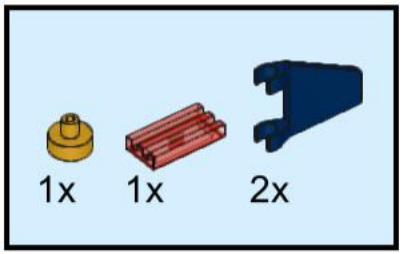

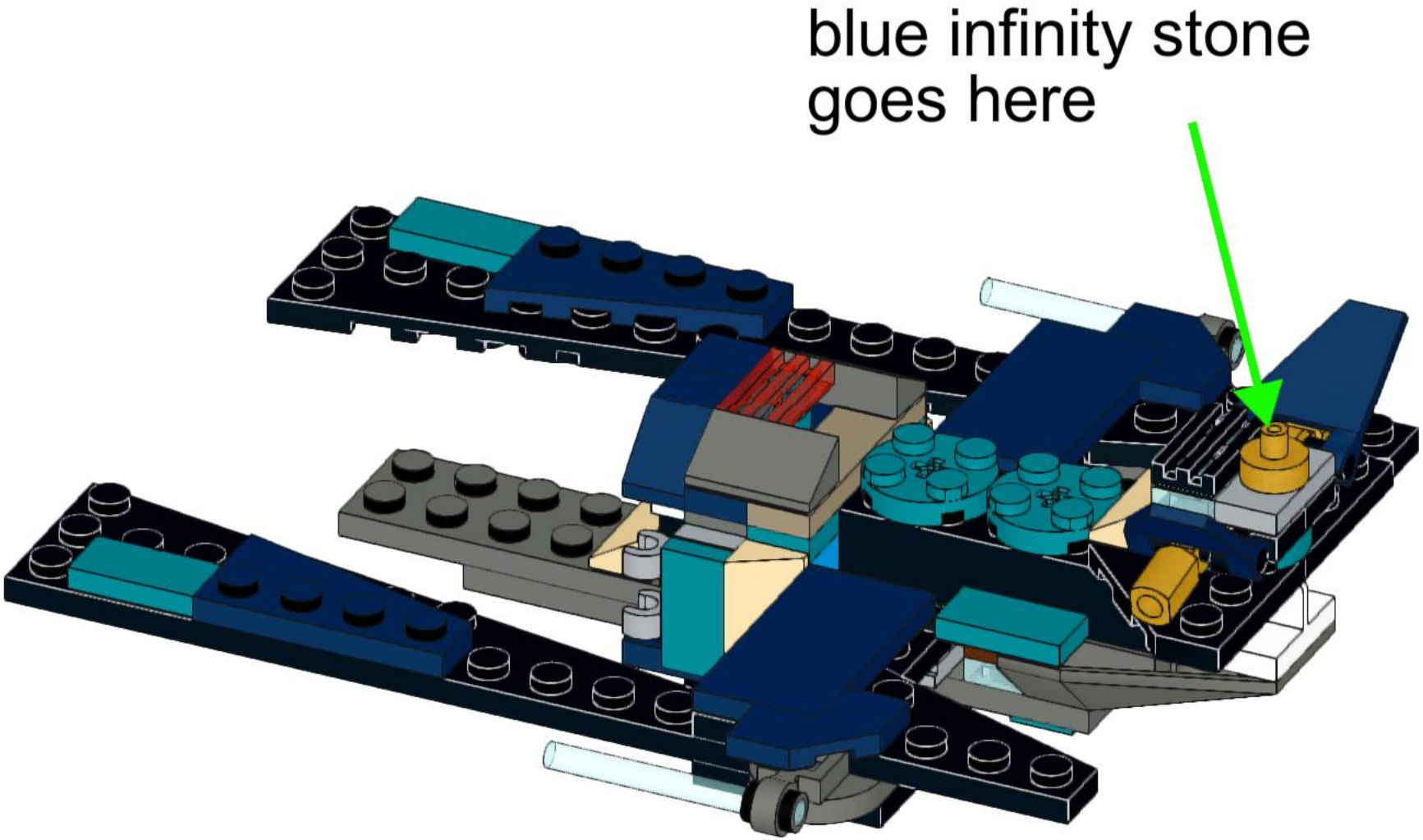

22

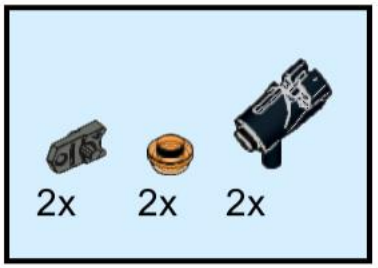

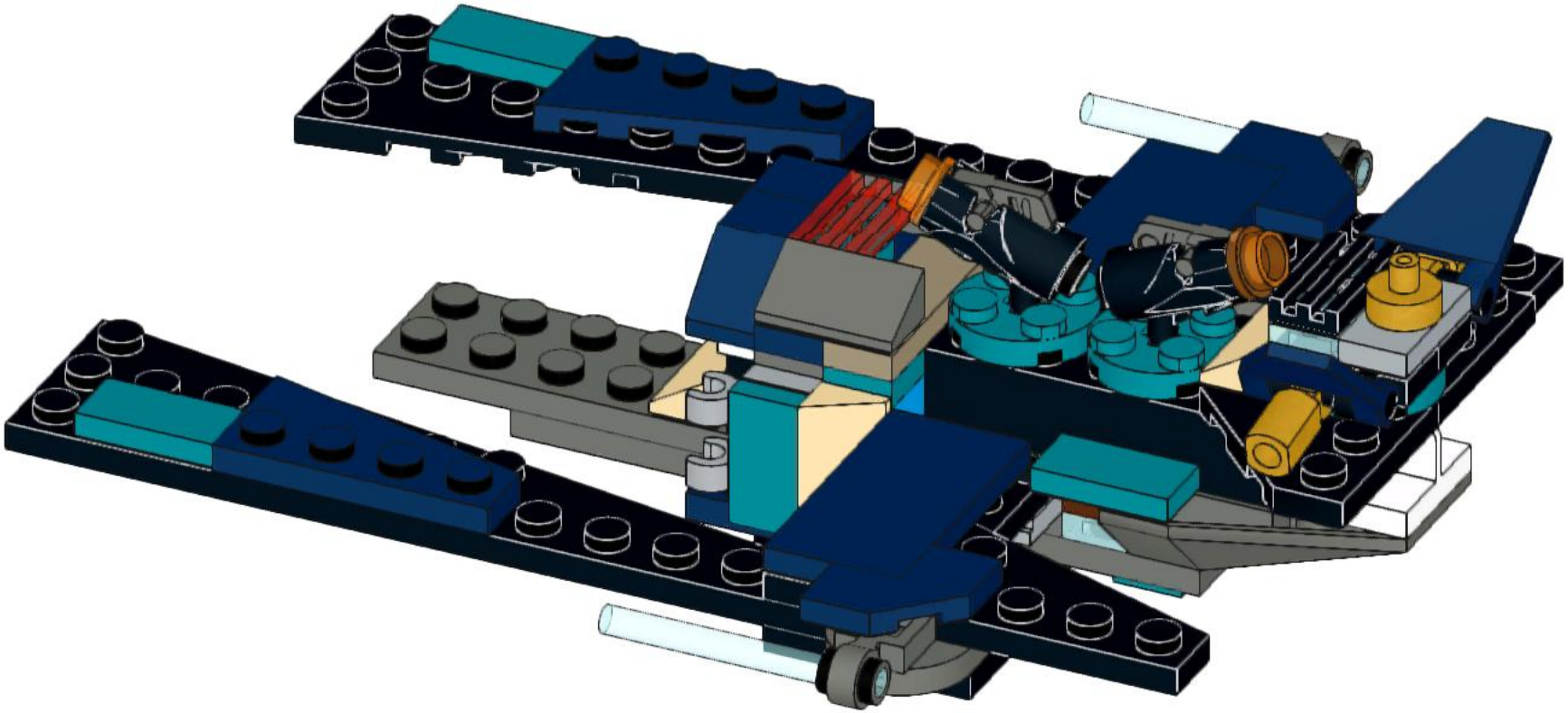

23

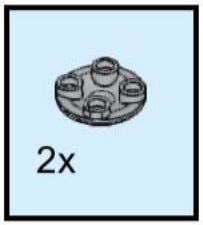

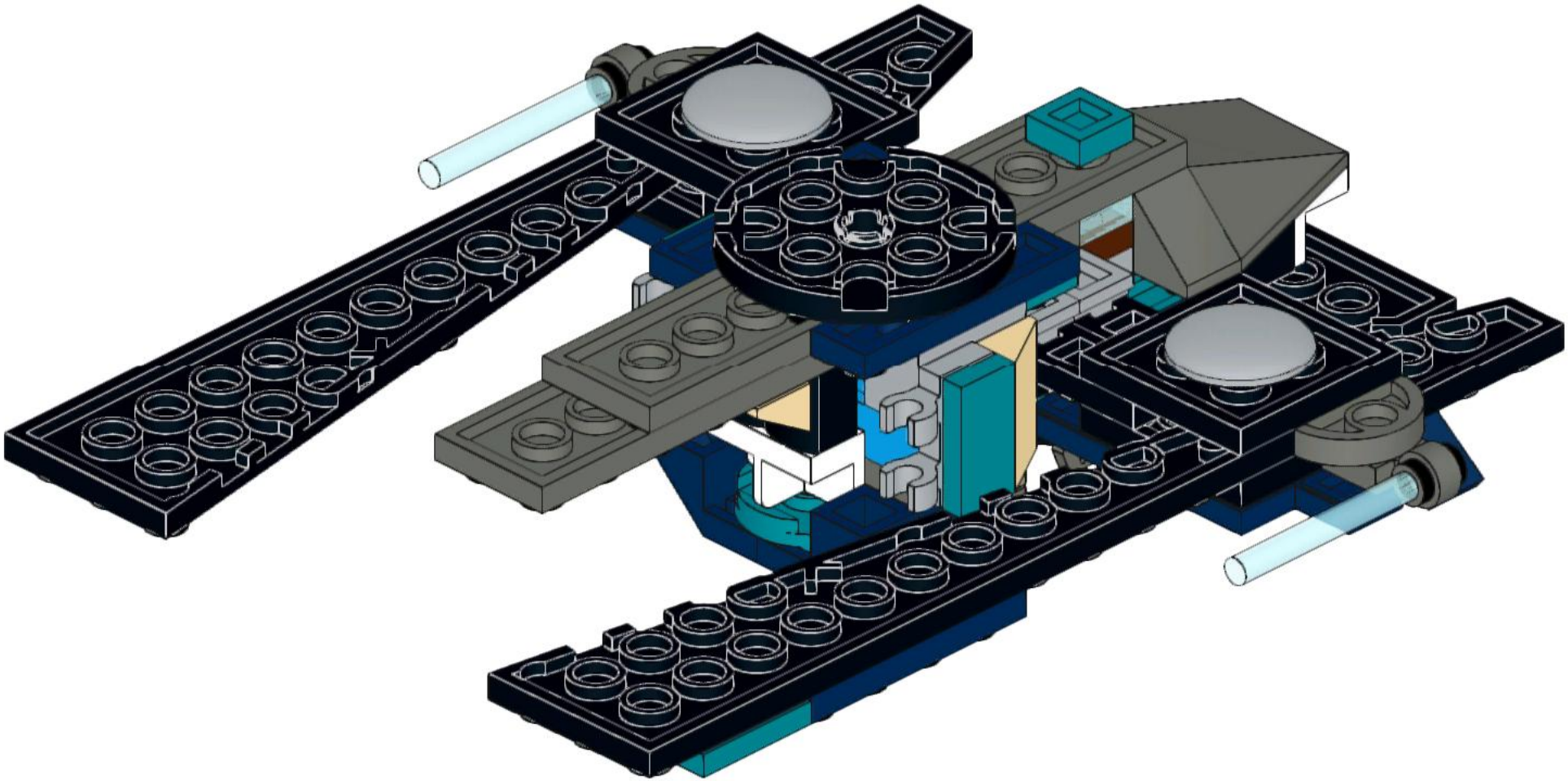
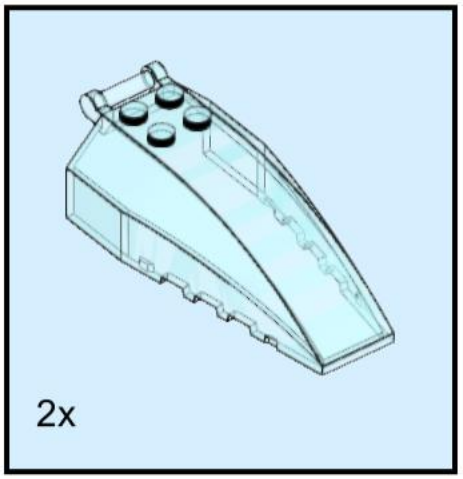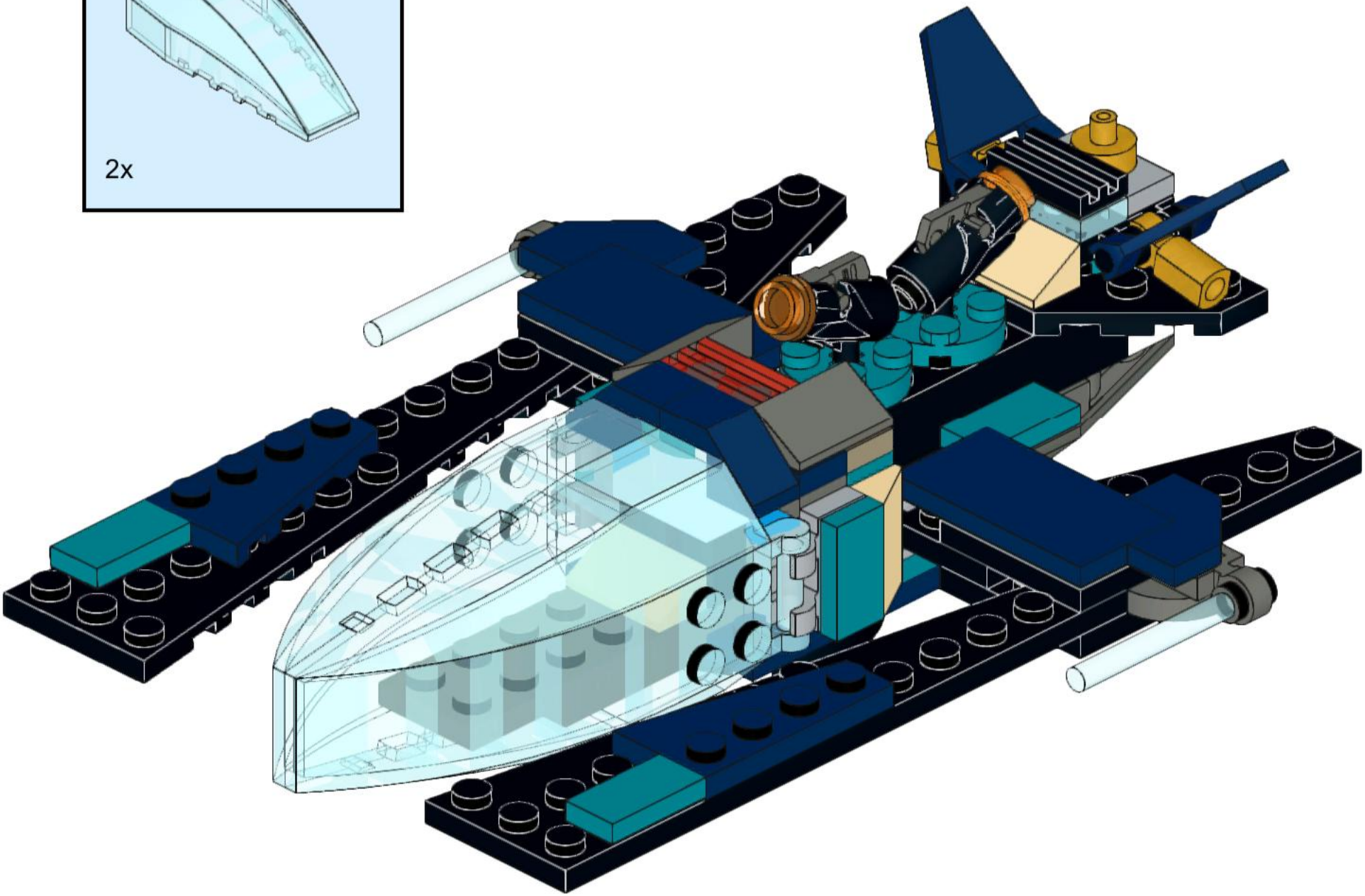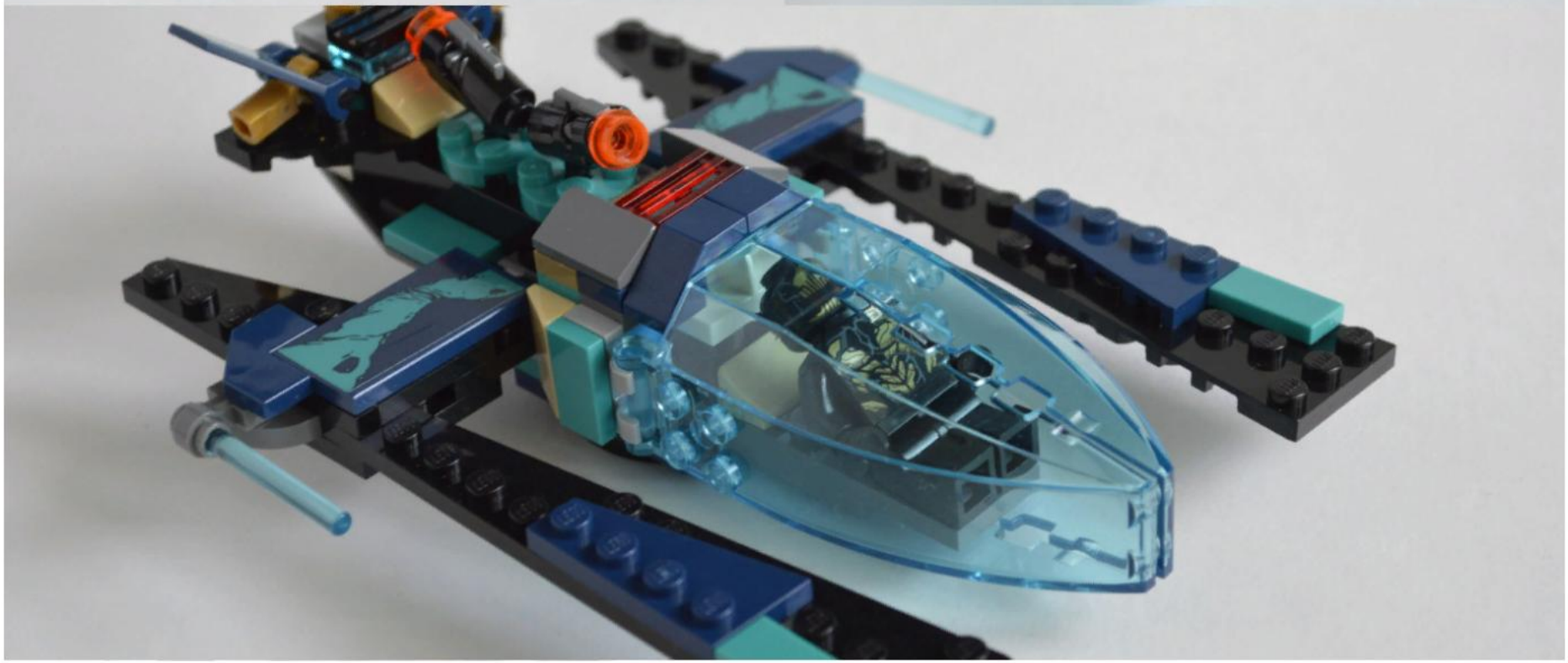
24